AEROGRAFO
SPRAY GUN

ES

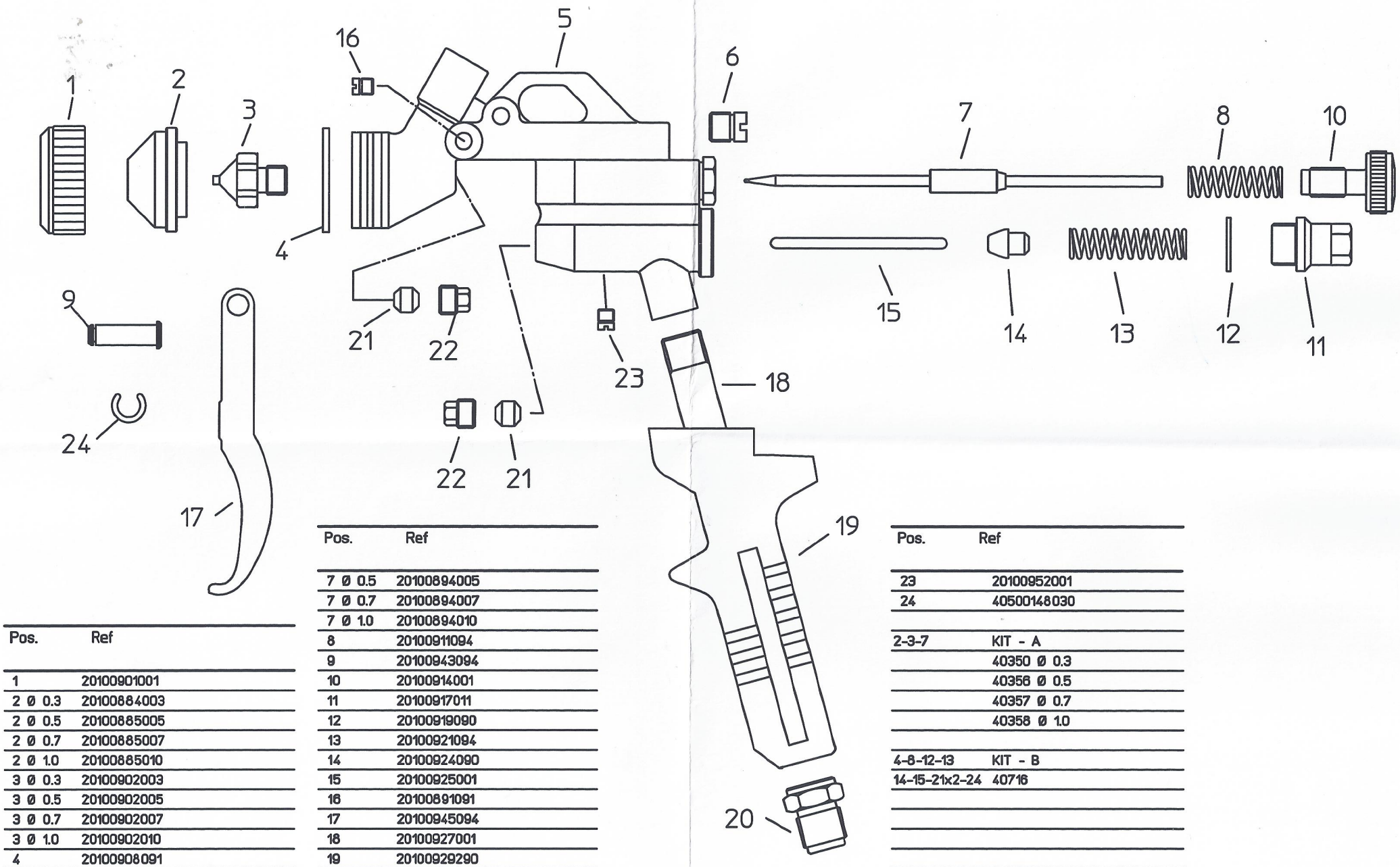

Pos.	Ref
1	20100901001
2 Ø 0.3	20100884003
2 Ø 0.5	20100885005
2 Ø 0.7	20100885007
2 Ø 1.0	20100885010
3 Ø 0.3	20100902003
3 Ø 0.5	20100902005
3 Ø 0.7	20100902007
3 Ø 1.0	20100902010
4	20100908091
5	20100907011
6	20100951001
7 Ø 0.3	20100894003

Pos.	Ref
7 Ø 0.5	20100894005
7 Ø 0.7	20100894007
7 Ø 1.0	20100894010
8	20100911094
9	20100943094
10	20100914001
11	20100917011
12	20100919090
13	20100921094
14	20100924090
15	20100925001
16	20100891091
17	20100945094
18	20100927001
19	20100929290
20	20100931001
21	20100939091
22	20100937101

Pos.	Ref
23	20100952001
24	40500148030
2-3-7	KIT - A
	40350 Ø 0.3
	40356 Ø 0.5
	40357 Ø 0.7
	40358 Ø 1.0
4-8-12-13	KIT - B
14-15-21x2-24	40716

AE 9/03