KA 20360 M

Onderdelentekening

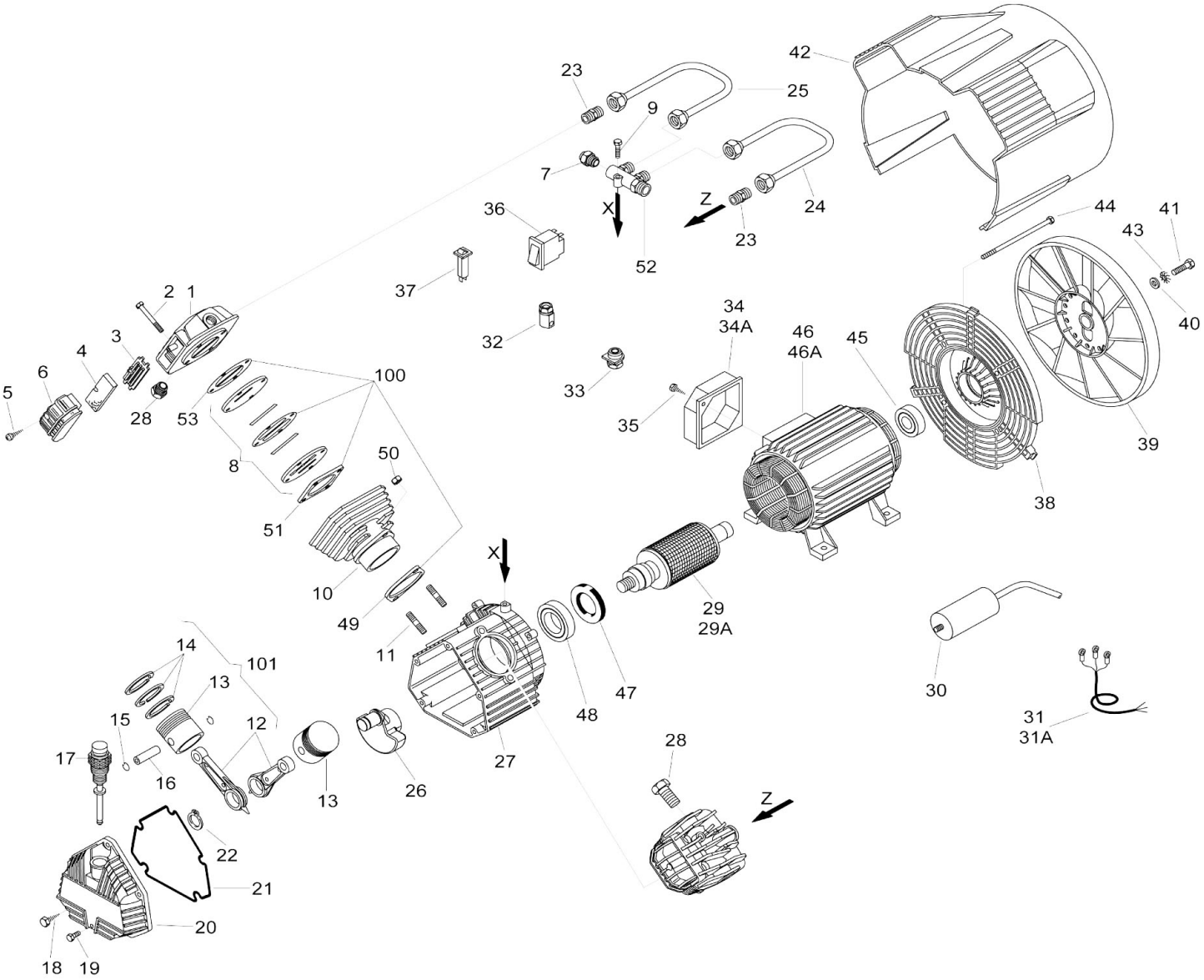

KA 20360 M

Onderdelentekening

Nr.	Code	Omschrijving	Description	Aantal
1	5030250008		Head	2
2	7011220000		Screw	8
3	7458340000		Filter plate	2
4	7210010000		Filtering element	2
5	7012010000		Screw	2
6	7210180000		Intake filter	2
7	7196000000		START valve	1
8	7459490000		Valve plate	2
9	7010120000		Screw	1
10	5060160008		Cylinder	2
11	7015020000		Stud bolt	4
12	5050160008		Con rod	2
13	7220050000		Piston	2
14	4080030000		Piston rings	2
15	7041030000		Ring	4
16	7050030000		Piston pin	2
17	7181060000		Oil level	1
18	7012180000		Screw	5
19	7011460000		Screw	1
20	7650010000		Carter cover	1
21	7078440000		Gasket	1
22	7040040000		Seeger	1
23	7081100000		Joint	2
24	7237010000		Tube dx.	1
25	7237020000		Tube dx.	1
26	5041390008		Counter weight	1
27	5070180008		Carter	1
28	7090080000		Plug	2
29	4280860000		Single phase rotor	1
29A	4280790000		Three phase rotor	1
30	7310410000		Capacitor 50 µF	1
31	7329900000		Single phase cable	1
31A	7329870000		Three phase cable	1
32	7501050000		Stretch eliminator	1
33	7501060000		Stretch eliminator	1
34	7382340000		Single phase cover	1
34A	7382350000		Three phase cover	1
35	7012020000		Screw	2
36	7410530000		3ph. thermal protection	1
37	7410390000		1ph. thermal protection	1
38	7640010000		Cover	1
39	7200340000		Fan	1
40	7038020000		Washer	1
41	7011090000		Screw	1
42	7150370000		Housing	1
43	7031010000		Washer	1
44	7015100000		Tension rod	4
45	7060030000		Bearing	1
46	4011450000		Motor V230 / V240	1
46A	4011340000		Motor V400	1
47	7071160000		SMIM ring	1
48	7060070000		Bearing	1
49	7078150000		Gasket - cylinder crankcase	2
50	7020070000		Nut	4

KA 20360 M

Onderdelentekening

Nr.	Code	Omschrijving	Description	Aantal
51	7078160000		Gasket cylinder-valve p.	2
52	7089950000		Manifold	1
53	7078580000		Gasket head-valve plate	2
100	4082080000		Set of gasket	2
101	4191040000		Set Con rod/Piston	1

KA 20360 M

Onderdelentekening

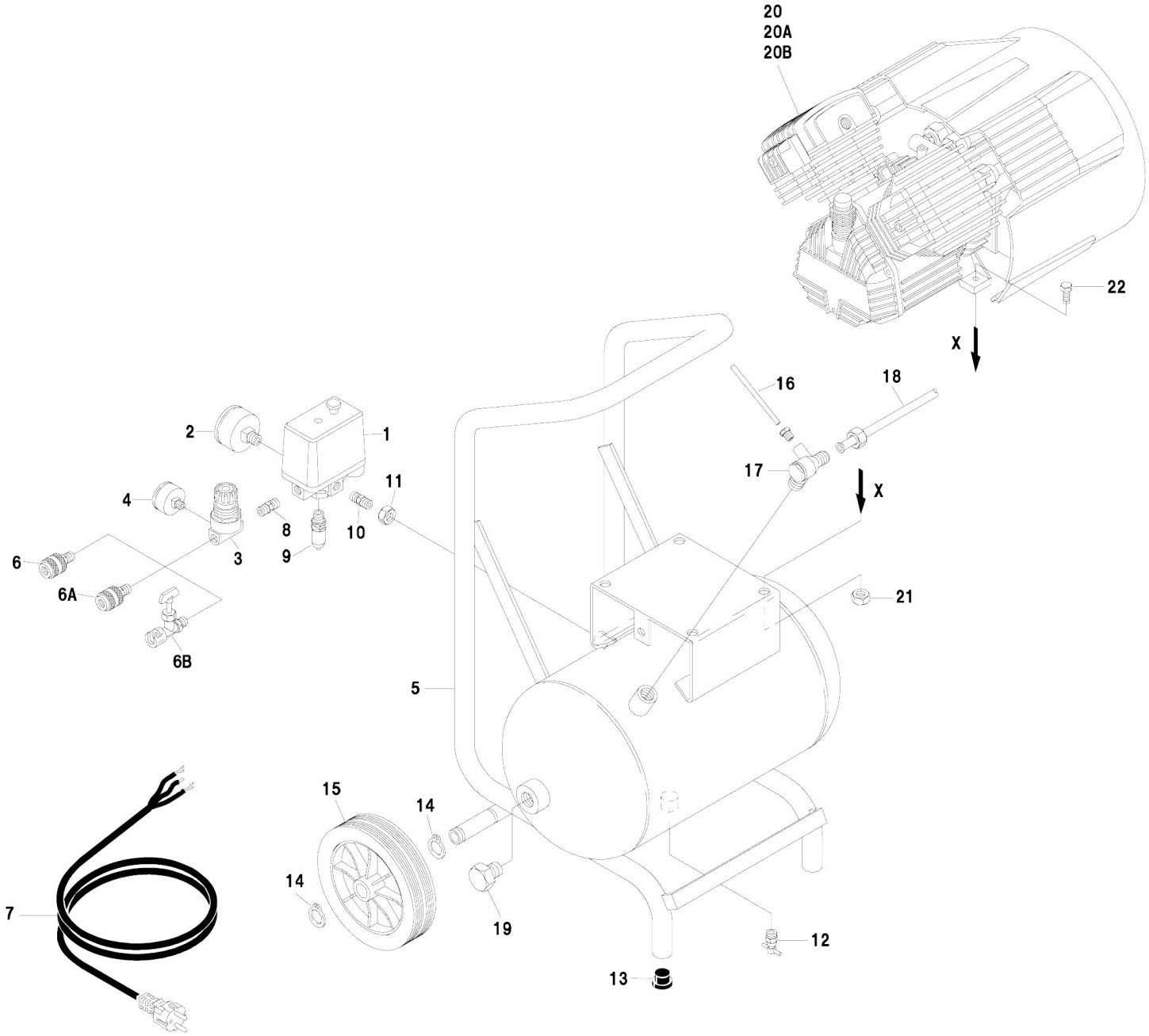

KA 20360 M

Onderdelentekening

Nr.	Code	Omschrijving	Description	Aantal
1	7250360000		Pressure switch	1
2	7110210000		Pressure gauge	1
3	7100530000		Pressure reducer	1
4	7110010000		Pressure gauge	1
5	5159570008		Tank	1
6	7130040000		German type Tap	1
6A	7130120000		Orion Tap	1
6B	7130010000		Tap	1
7	7329070000		Infeed cable	1
8	7081090000		Joint	1
9	7192010000		Safety valve	1
10	7081140000		Joint	1
11	7023040000		Blocking nut	1
12	7130160000		Discharge tap	1
13	7360040000		Rubber	2
14	7040040000		Seeger	4
15	7260060000		Wheel	2
16	7230010000		Rilsan hose	1
17	7190190000		Non return valve	1
18	7236360000		Infeed tube	1
19	7090030000		Plug	2
20	2026001000		Pump unit (VX 254)	1
20A	2027001000		Pump unit (VX 304)	1
20B	2024202000		Pump unit (VX 402)	1
21	7020240000		Nut	4
22	7011100000		Screw	4
27	7190010000		Non retur valve	1
28	7280070000		Handle	1
29	2027001000		Pump unit VX304	1
29A	2024202000		Pump unit VX402	1
30	7011100000		Screw	4
31	7020240000		Nut	4