LD 18-248

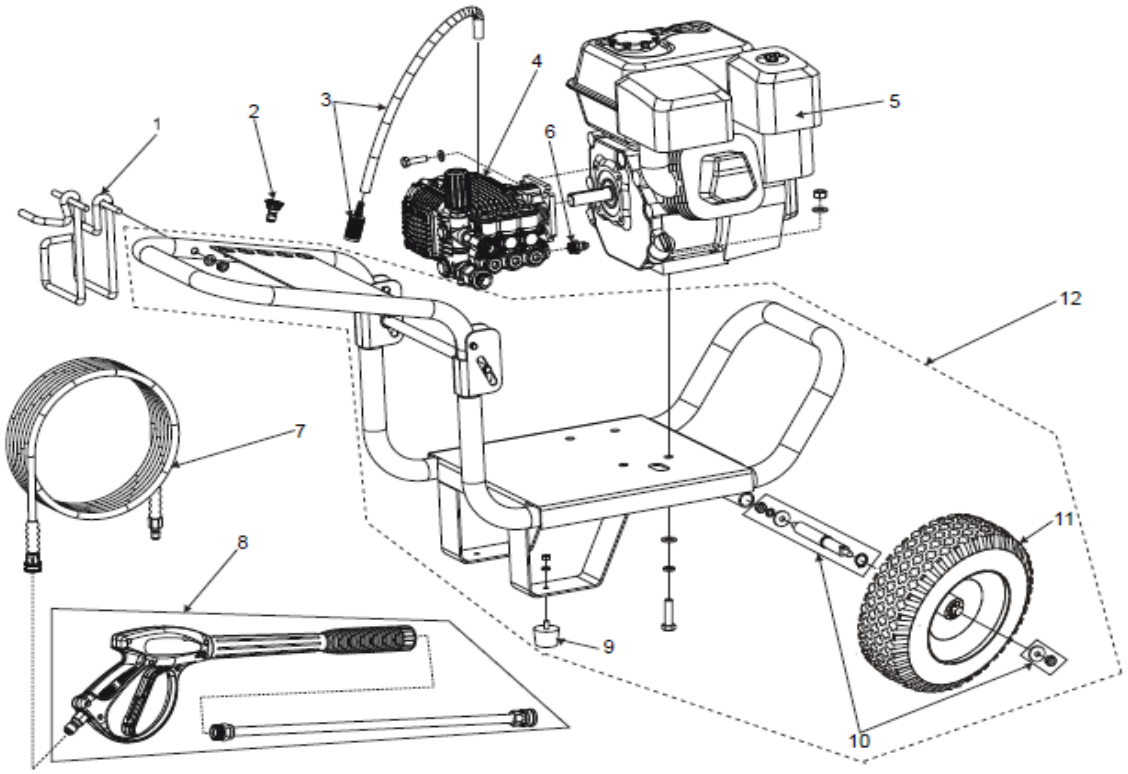

1		CODE	DESCRIPTION	QT
1		8150100	PORTACAVO CARRELLO MOTOP.ANTINCENDIO CE	1
2		8150007	SET UGELLI ALTA PRESSIONE(5PZ)LD-CE	1
3		8150052	TUBO DETERGENTE LD/MD120-CE	1
4		8150003	POMPA PRESSIONE 3WZ-1807A HP 13 LD-N/CE	1
5		102291460	MOTORE LONCIN G390FD HP13 T/Q N/CE	1
6		8150109	VALVOLA PROTEZIONE TERMICA LD 12-18 CE	1
7		8150005	TUBO ALTA PRESS.10MT 3/8 4310PSI LD-CE	1
8		8150004	PISTOLA COMPLETA -MULTIREG 248 BAR LD-CE	1
9		8150103	ANTIVIBR. CARRELLO MOTOP.ANTINCENDIO CE	1
10		8150104	ASSALE CARRELLO MOTOP.ANTIN.CP1070/AV CE	1
11		8150105	RUOTA CARRELLO MOTOP.ANTIN.CP1070/AV CE	1
12		8150110	CARRELLO CP 1070 LD18-248 (NERO) N/CE	1

LD 18-248

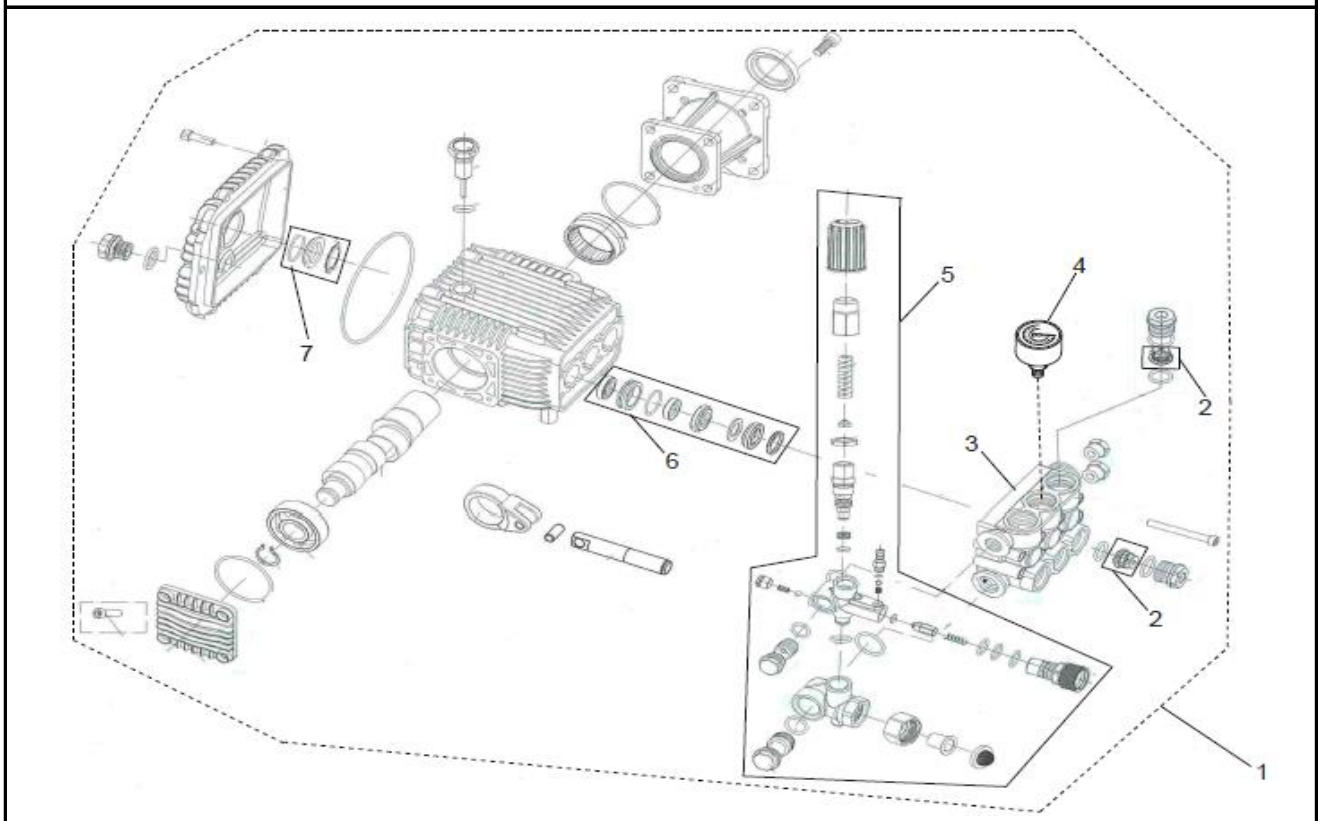

2		CODE	DESCRIPTION	QT
1		8150003	POMPA PRESSIONE 3WZ-1807A HP 13 LD-N/CE	1
2		8150150	VALVOLA MD120-CE	1
3		8150156	MANIFOLD HEAD 18/248 CE	1
4		8150010	MANOMETRO 8000 PSI LD-CE	1
5		8150153	CONTROL SET 6,5-9-13HP LD-CE	1
6		8150154	SET ANELLI TENUTA 18/248 CE	1
7		8150011	SPIA LIVELLO OLIO LD-CE	1