Gasoline Water Pump
Motopompa a benzina

CMA-MSA 30
CMA-MSA 40

CMA-MSA 30

CMA-MSA 40

CE

GB Instruction Manual

I Libretto Istruzioni

Foreword

Thank you for your choosing our brand water pump. Before you operate this pump, please read the manual carefully and understand all the contents in the manual. Pay particular attention that don't operate the pump without reading the manual otherwise, any personal injury or mechanical failure because of the work in risky way in violation of rules, our company will be irresponsible for it.
This manual describes the basic operation and maintenance regulations. If you have anything unclear or you want to know the other situation about the pump set please contact with the local dealer.
The data, instructions and specifications in this manual are collected based on the latest designing, i.e. it is the newest information. Our company has the right of explanation. If any thing changes, we will not inform you in advance.

Premessa

Grazie per aver scelto la nostra motopompa a benzina.
Prima di azionare la motopompa, Vi consigliamo di leggere con attenzione il manuale d'istruzioni e comprenderne appieno il suo contenuto. Vi preghiamo, inoltre, di notare che, qualora la motopompa sia azionata senza le dovute precauzioni previste nel presente manuale, qualsiasi danno a persone o avaria meccanica provocata a seguito di una violazione delle regole imposte, ricadrà sotto la responsabilità della Vs. società. Il presente manuale descrive le operazioni di base e le norme concernenti la manutenzione. In caso di dubbi o qualora fossero necessarie ulteriori informazioni relative al gruppo pompa, Vi preghiamo di contattare il Vs. distributore locale.
I dati, le istruzioni e le specifiche contenute nel presente manuale sono state raccolte sulla base delle versioni più aggiornate. La nostra società si riserva il diritto di effettuare eventuali modifiche, se necessarie, senza previo avviso.

Contents

1. Safety instructions ..... pag. 4
2. Description of components ..... pag. 4
3. Main application ..... pag. 5
4. Oparation before starting ..... pag. 5
5. Operation ..... pag. 7
6. Stop the engine ..... pag. 8
7. Maintenance ..... pag. 8
8. Transportation & storage ..... pag. 10
9. Troubleshooting ..... pag. 10
10. Specifications ..... pag. 11

Indice

1. Istruzioni di sicurezza ..... pag. 12
2. Descrizione dei componenti ..... pag. 12
3. Impiego ..... pag. 13
4. Operazioni prima dell'avviamento ..... pag. 13
5. Funzionamento ..... pag. 15
6. Arrestare il motore ..... pag. 16
7. Manutenzione ..... pag. 16
8. Trasporto e immagazzinamento ..... pag. 18
9. Ricerca guasti ..... pag. 18
10. Specifiche tecniche ..... pag. 19

1. Safety instructions

GB

- Do not use this pump to suck the inflammable liquid or corrosive liquid such as gasoline oil and acids, also the seawater, engine oil, alky and honey and so on.
- Place the pump set on the firm and plane ground to avoid it tilts or turnovers.
- Keep the pump away from building wall at least 1m and do not allow the inflammable close to the pump.
- Must know about how to stop the engine and how to operate all the control devices. Do not allow using the pump in a risky way in violation of rules.
- The gasoline is extremely easy to burn, and will produce explode under certain condition. Adding the gasoline oil must be in the place where the ventilation is in good condition. Do not smoke when adding or in oil storage place, and the flame or the spark does not allow to exist.

Do not let the gasoline oil over brimming and tight firmly the tank cover after adding.

2. Description of components

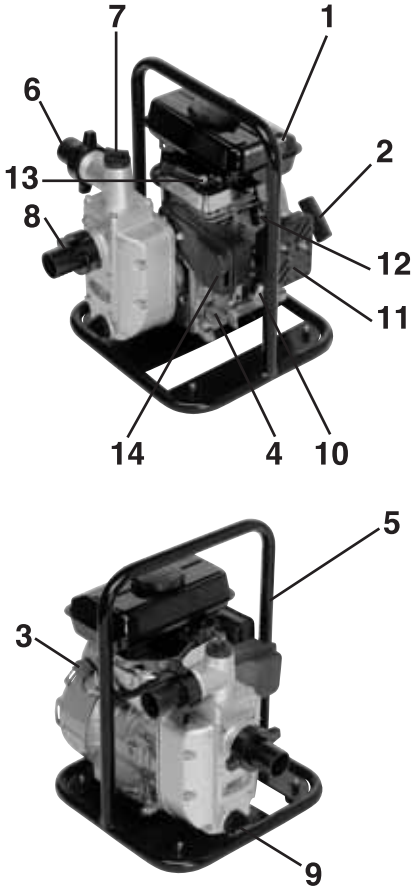

1) Fuel tank
2) Starting handle
3) Engine switch
4) Oil dipstick
5) Frame
6) Outlet
7) Inlet
8) Inlet water pipe
9) Pump drain plug
10) Throttle control lever
11) Air cleaner
12) Choke control lever
13) Ignition cable
14) Muffler

Fig. *1*

3. Main application

GB

The gasoline engine is mainly used for agriculture, sprout, garden, and big shed in pumping water of irrigate, sprinkle land, and flood damages. Don't pump corrosive liquid.

4. Operation before starting

1. Connect the inlet water pipe.

- Use the general water pipe, joints and clamp to connect. The inlet water pipe must be continuous and unfolded structure. The length of water pipe must not be exceeded required length. The pump will has the optimum performance where the distance between the pump and water source is not far. The self-suction time is proportional to the inlet water pipe length.
- The filter should be fitted on the end of inlet water pipe with the clamp, as shown on figure 2.

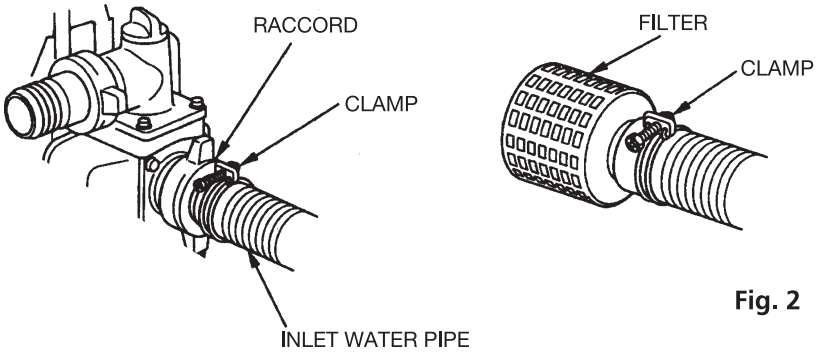

Fig. 2

Cautions:

a. Before pumping, fit the filter on the tail end. The filter can filter foreign matter in the water that cause impeller blocked and damaged.
b. Tighten the joint and clamp to avoid air leakage and reduce suction. Inlet pipe loose will reduce water pump performance and self-suction.

2. Connect the outlet water pipe

Use the general water pipe, joints and clamp to connect the outlet water pipe. Better use a big diameter short pipe. Because small diameter long pipe will increase flowing resistance and reduce water pump output power.
Caution: Firmly fix pipe connecting clamp to avoid outlet pipe loosen under the high pressure.

3. Check the level of machine oil

The gasoline engine of pump not filled with the machine oil when dispatching out factory. Please fill in with brand of 10W-SAE or equivalent oil before it is first used. The dirt oil or other machine oil is not allowed.
When check the oil level. The engine should be stopped and should be in horizontal position. Remove the oil dipstick, clean it and insert it into oil filling hole, but need not to screw it. If oil level is too low, and the add oil till the upper of filling hole.

Cautions: If the machine oil is not enough, the engine will be damaged seriously.

4. Check the level of fuel

Remove the fuel tank cover and check the fuel level, if the level is too low, add 90# gasoline. Do not use mixture oil of machine and gasoline.
Avoid the dirty material and water entering into the fuel the fuel tank.

Cautions:

Do not allow the gasoline spill, if it is so, clean and weep it out before starting the engine. Avoiding your skin contact with gasoline for a long time and should put it on the place where the children do not reach.

5. Check air cleaner element (as shown on Fig.3)

Remove nuts, washer and air cleaner cover.
Check the filter element, if the necessary, clean it.

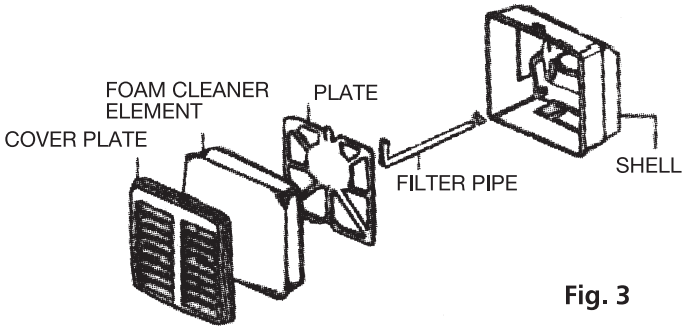

Fig. 3

Cautions:

When the air cleaner is not mounted on the engine, the engine must not be started, otherwise, the dirt material will be sucked in to engine through the carburetor and it will leak to the engine wear increasing.

6. Check the pump (as shown on the Fig.4)

Before working, the pump must be filled up with water.
Cautions:
If the pump is not filled with water. Do not let the pump operate, for a long time without water, the seal of pump shall be damaged, stop the engine immediately and let the pump cool down, then add the water.

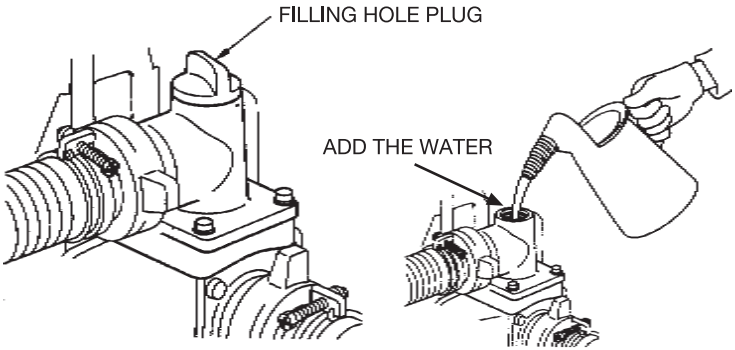

Fig. 4

5. Operation

GB

I. Open the fuel cock
2. Close the choke (as shown on the Fig. 5)

Cautions:

When engine is in hot condition or the environmental temperature is very high, it's unnecessary to use the choke
(That means not close the choke before start)

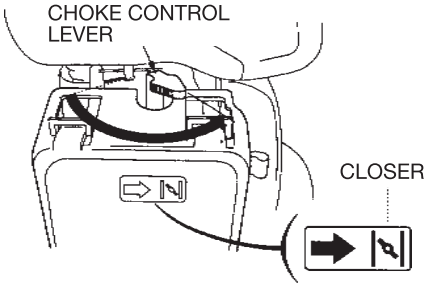

Fig. 5

3. Put the engine switch to
   ON position (as shown on the Fig. 6)

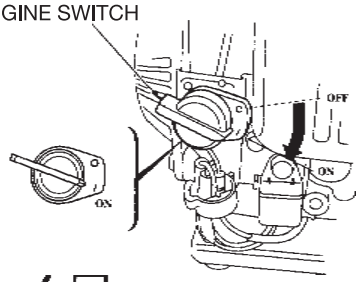

Fig. 6

4. Move the adjusting handle to
   proper position (as shown on the Fig. 7)

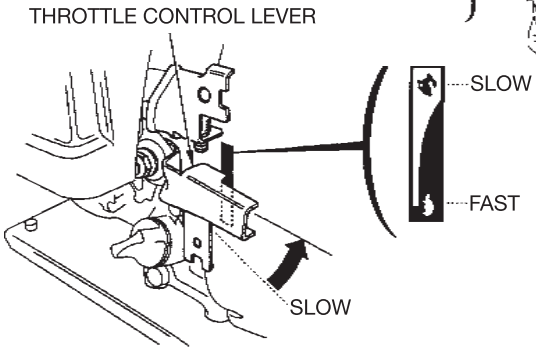

Fig. 7

5. Pull the starting handle slightly till the resistance force is felt, then pull it up quickly.
   Slightly release the starting handle back to avoid suddenly release damage the starter.
6. After the engine warm up, open the choke gradually (as shown on the Fig. 8).

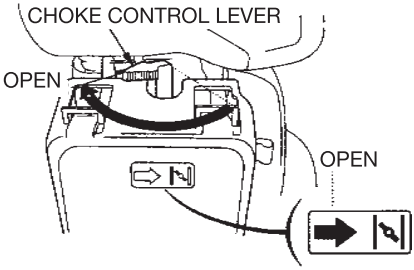

Fig. 8

7. Put the governor handle at the preset speed (as shown on the Fig. 9)

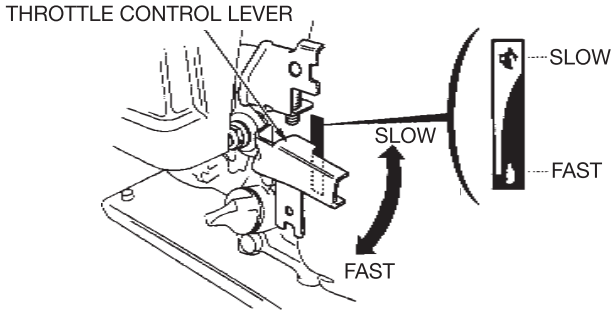

Fig.9

6. Stop the engine

Move the throttle valve control lever to the right end.
Put the engine switch to the OFF position.
Put the fuel cock to OFF position.
Stop the engine at the event of emergency, directly put the engine switch to OFF position.

7. Maintenance

In order to keep this water pump in good performance, it is necessary to check and adjust it periodical. The periodical maintenance will prolong the pump's service life.
Caution:
Before maintenance, stop the engine. If the maintenance must be carried out in engine running condition, the maintenance area must be in good ventilation because the Co in exhaust gas is very harmful for your healthy.
If this pump has to be used for pumping sea water, after accomplishing, pump fresh water immediately to reduce the corrosion and flush out the deposit.

1.Change the engine oil (as shown on the Fig.10)
When the pump is used first time, after one month or 20 hours used, the engine oil should be changed one time, then after every six months or every 100 hours used, change the oil one time.
Chang the engine oil should be carried out under the condition for hot engine, it will insure the used oil draining out thoroughly.
A. Remove the oil dipstick and drain plug, then drain the used.
B. Refit the oil drain lug and tighten it firmly.
C. Add the new engine oil up to required level. The oil volume is 0 .45L.
If contacting engine oil, wash hands with soap and clean water.

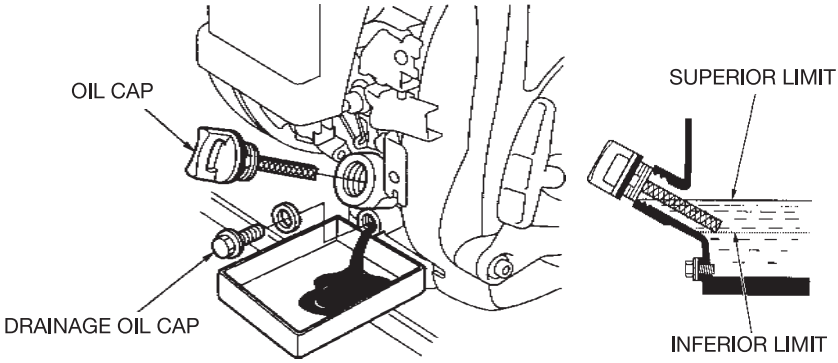

Fig. 10

2.Maintain the air cleaner:

GB

A dirt air cleaner will reduce the air entering the carburetor.
In order to avoid the carburetor failure, please maintain the air cleaner periodically. If the working environment is heavy dirty, the maintenance frequency for air cleaner should be increased.

Cautions:

When the air cleaner is not mounted on the engine, do not operate the engine, otherwise, the dirt material will be sucked into engine, it will lead to the engine wear increasing.

a. Remove nut out and then take off the cover of cleaner and the filter element.
b. Clean the filter element with uninflammable or high flame point solution, then, let it dry thoroughly.
c. Put the filter clement into the clean engine oil, press out the surplus engine oil.
d. Reassembly the filter element andcleaner cover.

1. Maintain the spark plug (as shown on the Fig.11):
   In order to ensure the engine keeping on operation, there must be correct gap of the spark plug and there must not be carbon deposit.

a. Remove the cap of spark plug.

Cautions:

- When engine in running, the muffler will be very hot. Do not contact the muffler. ,

b. Inspect the spark plug visually. If there is wear obviously on the spark plug, damageor crack on the isolating ring, don't use this spark plug. Clean the spark plug with wire brush before reinstalling.
c. Measure the clearance of spark plug with feeler.
d. Correct the clearance by moving the side electrode.
The spark plug clearance is of 0.6-0.7mm.

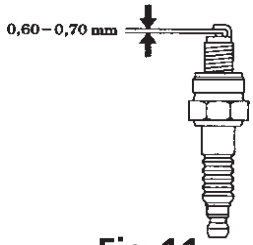

Fig.11

e. Check the spark plug seal - ring, screw in the spark plug with special spanner so as to protect its threads (as shown on the Fig.12).

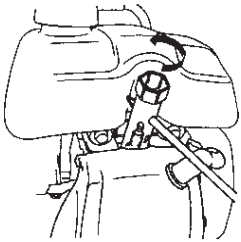

Fig.12

Cautions:

When fitting the new spark plug, after pressing against the seal ring, the spark plug should be screwed *1/2* turn again. If the used spark plug, it should be screwed *1/2 - 1/4.* If it is not so, it will be overheating and thus the engine will be damaged. Do not use the spark plug with unsuitable calorific value range.

8. Transportation and storage

GB

Cautions:

- Before transporting and storage should let the engine cool down.
- When transporting water pump, put the fuel cock to OFF position and place the pump in horizontal to avoid the fuel spill out.

Before long period storage:

1. Ensure the storage area is dry and clean.
2. Clean the internal of the pump to remove the deposit and slush it with clean water. Then unscrew the water drain plug to drain out the water thoroughly. Finally, refit the plug.
3. Drain out the fuel.

Put the fuel cock to OFF position, remove the drain screw of the float chamber of the carburetor. Fill the gasoline into proper container. .
Put the fuel cock to ON position, drain out the fuel in tank.
Refit the drain screw of the carburetor

4. Change the engine oil.
5. Remove the spark plug, add spoon clean engine oi1 in cylinder, turn the crankshaft several cycle to lubricate the cylinder and piston, then, refit the spark plug.
6. Cover the pump to avoid the dust.

9. Troubleshooting

The engine does not be started, check whether

1. The fuel is not enough?
2. The fuel cock is not opened?
3. The fuel is not reached carburetor?

After putting the fuel cock to ON position, remove the drain oi1 plug at the bottom of carburetor to check the fuel whether or not reach to the carburetor.

Cautions:

If the oil spilled out, clean and wipe it before testing the spark plug and stating the engine, otherwise the spilling oil or oil steam can be fired.

4. Is the engine switch in ON position?
5. Is the engine oil in crankcase enough?
6. Is the spark plug in good condition?

a. Remove the spark plug cap, clean it, and remove the plug.
b. Fit the spark plug into the cap.
c. Put the engine switch to ON position.
d. Earth the spark plug side electrode to engine. Pull up recoil starter, check the spark plug if there is a spark.
e. If there is no spark, change the spark plug. If there is spark, start the engine according to owner' s manual requirement.

7. If the engine does not be started yet please sent the pump to our service station for repairing.

The pump not pumping water:

1. No water in the pump, please add enough the water from the filling hole.
2. The filter blocking, please remove and wash it.
3. No firmly fitting, please firmly fix.
4. The water pipe leaking water, please change with new pipe.
5. Sucking distance too high, please raise the water pipe a little higher from the water level.

If still not sucking water, please contact with dealer for repairing or renewing.

10. Specifications

GB

Type	CMA 30 - MSA 30	CMA 40 - MSA 40
Max. Power	1.8 kw (2.5HP)	1.8 kw (2.5HP)
Displacement	97 cc	97 cc
Fuel tank capacity	1 l	1 l
In water pipe dia.	25 mm (1")	40 mm (1"½)
Out water pipe dia.	25 mm (1")	40 mm (1"½)
Revolution	3600 rpm	3600 rpm
Max. lift head	26 m	20 m
Max. suction head	7 m	7 m
Max. flow rate	100 l/min	180 l/min
Size	400x320x420 mm	350x320x420 mm

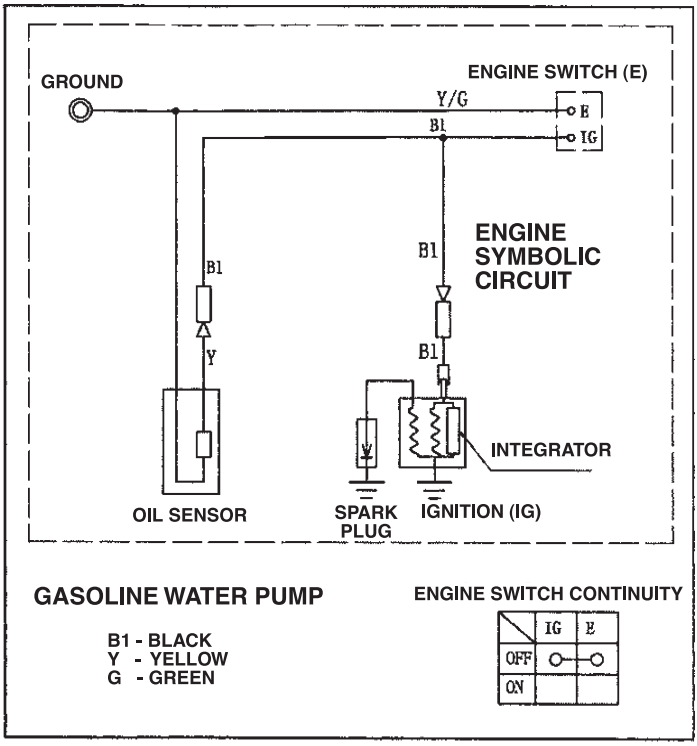

DICHIARAZIONE DI CONFORMITÀ

GB

EC declaration of conformity

Si dichiara che gli articoli del presente libretto sono conformi alle seguenti Direttive:

- 2006/42/CE
- 2001/63/CE
- 2002/88/CE
- 2000/14/CE

Applied harmonized standards:

- EN 12100-1/EN 12100-2/EN ISO 3744

I

Dichiarazione **CE** di conformità

Si dichiara che gli articoli del presente libretto sono conformi alle seguenti Direttive:

- 2006/42/CE
- 2001/63/CE
- 2002/88/CE
- 2000/14/CE

Norme armonizzate applicate:

- EN 12100-1/EN 12100-2/EN ISO 3744

SPERONI S.p.a.

I-42024 CASTELNOVO DI SOTTO (RE) - VIA S. BIAGIO, 59

Data - *Date:* 01-01-2011

(Direttore Generale - *General Manager*) Brenno Speroni

Cod. 7108641 - REV. 4 - 01/2011